1.Explain VLSI design flow.

A) A design flow is a series of steps that convert what IC designers want (usually written in RTL format) into the actual layout data of a chip, known as GDSII *(Graphic Data System II)*

When this process is optimized, it helps designers create chips more smoothly and with fewer mistakes.

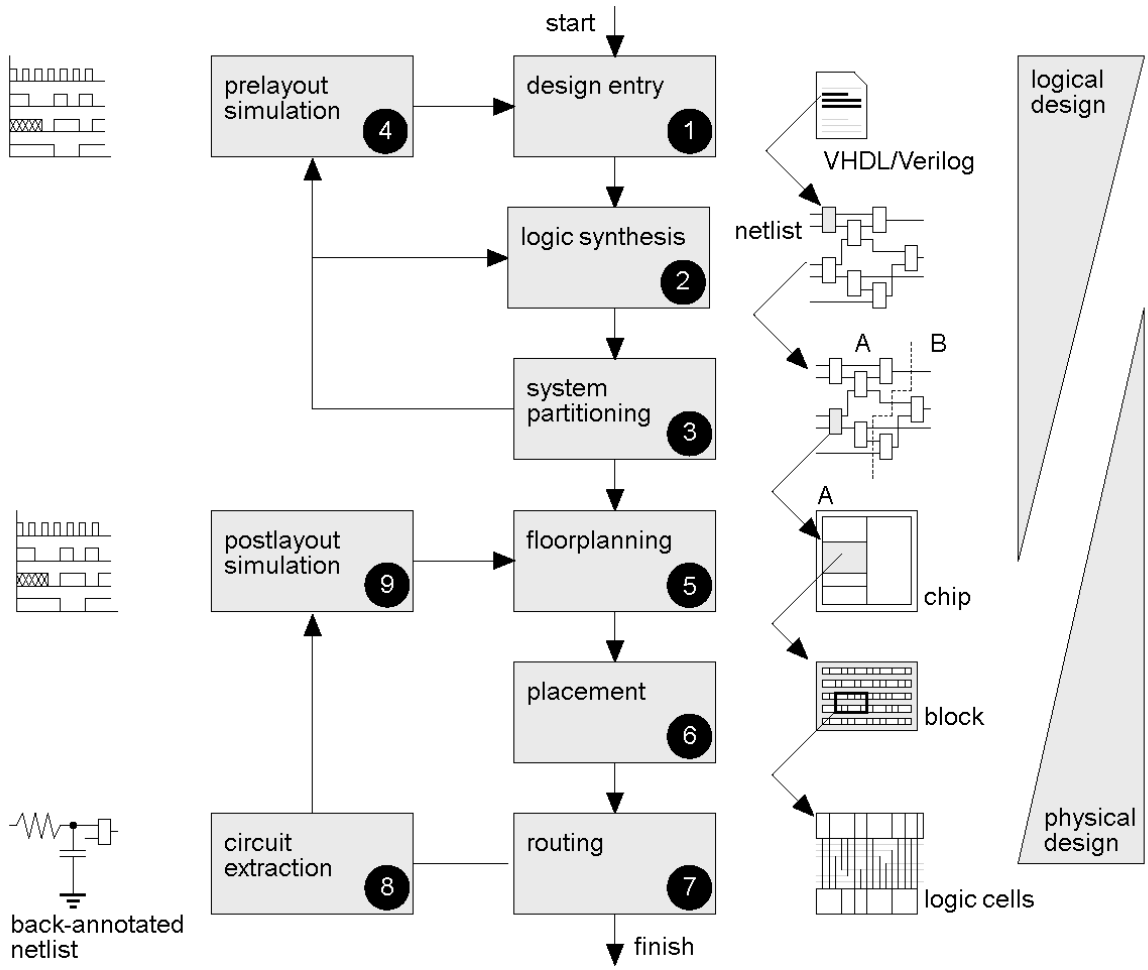

Front-end design (Logical design):

1. **Design entry :** Enter the design in HDL or schematics
2. **Logic synthesis :** It converts HDL to optimized gate-level netlist
3. **System partitioning:** It divides large design into IC-sized blocks
4. **Pre-layout simulation:** It validates functionality and timing

In summary, the ***front-end design flow converts the RTL code to an optimized gate-level netlist, partitions the design, and validates the logic pre-layout,*** preparing for the back-end implementation.

Back-end design (Physical design):

5. **Floor planning** - Arrange the blocks of the netlist on the chip
6. **Placement** - Decide the locations of cells in a block
7. **Routing** - Make the connections between cells and blocks
8. **Circuit Extraction** - Determine the resistance and capacitance of the interconnect
9. **Post-layout simulation** - Check to see the design still works with the added loads of the interconnect

The back-end flow turns the front-end into the actual chip layout. It checks that the design still works correctly after including the effects of layout wiring. This whole process takes the RTL code all the way to the final layout ready for manufacturing.

2) Describe NMOS encoding.

A) NMOS encoding refers to the method of **representing and implementing Boolean logic functions using only NMOS transistors**, where logic levels are encoded by voltage levels:

- **Logic '1' → High voltage (VDD)**
- **Logic '0' → Low voltage (GND)**

Stick diagram

Encodings for a simple single metal nMOS process

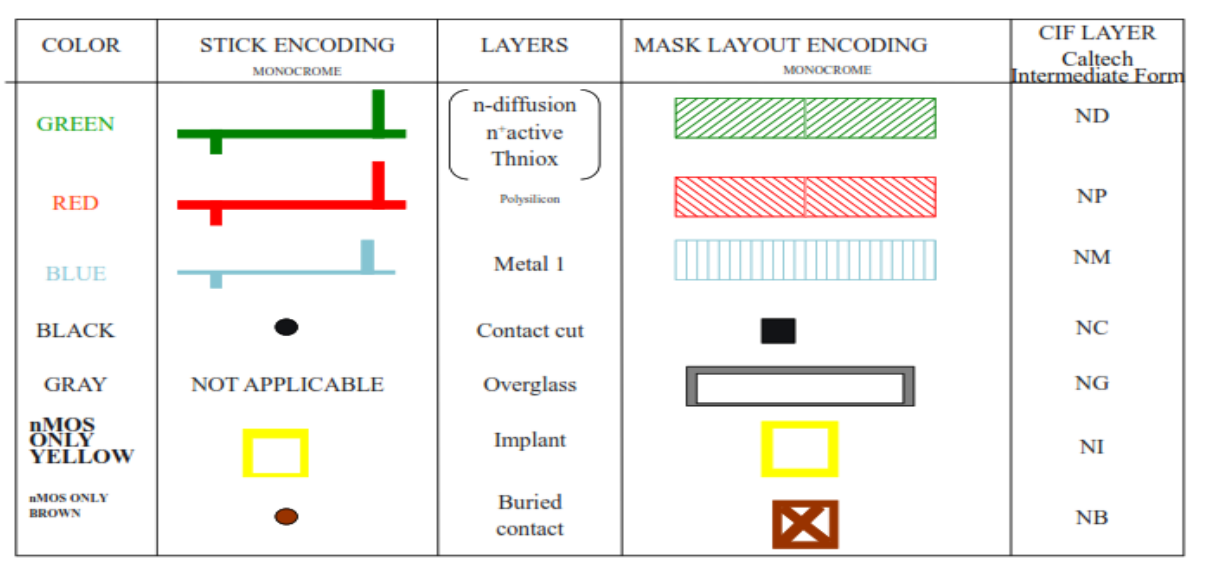

COLOR	STICK ENCODING MONOCROME	LAYERS	MASK LAYOUT ENCODING MONOCROME	CIF LAYER Caltech Intermediate Form
GREEN		n-diffusion n⁺active Thniox		ND
RED		Polysilicon		NP
BLUE		Metal 1		NM
BLACK		Contact cut		NC
GRAY	NOT APPLICABLE	Overglass		NG
nMOS ONLY YELLOW		Implant		NI
nMOS ONLY BROWN		Buried contact		NB

FEATURE	FEATURE (STICK)	FEATURE (SYMBOL)	FEATURE (MASK)
n-type enhancement mode transistor	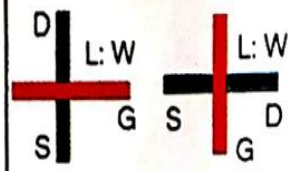		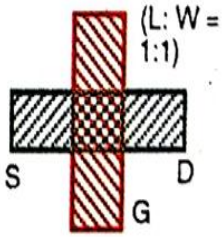
Transistor length to width ratio L: W should be shown.			
n-type depletion mode transistor nMOS only	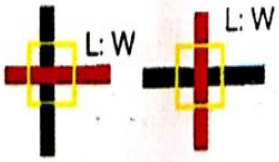		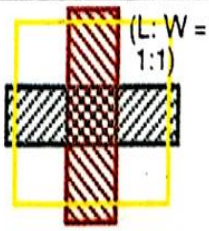
Source, drain and gate labelling will not normally be shown.			

3) Draw the layout of Y= AB+C.

A)

$$\boxed{Y = AB + C}$$

(•) operation

pmos – ||e

nmos – Seriel

(+) operation

pmos – Seriel

Nmos – ||e.

Schematic diagram:

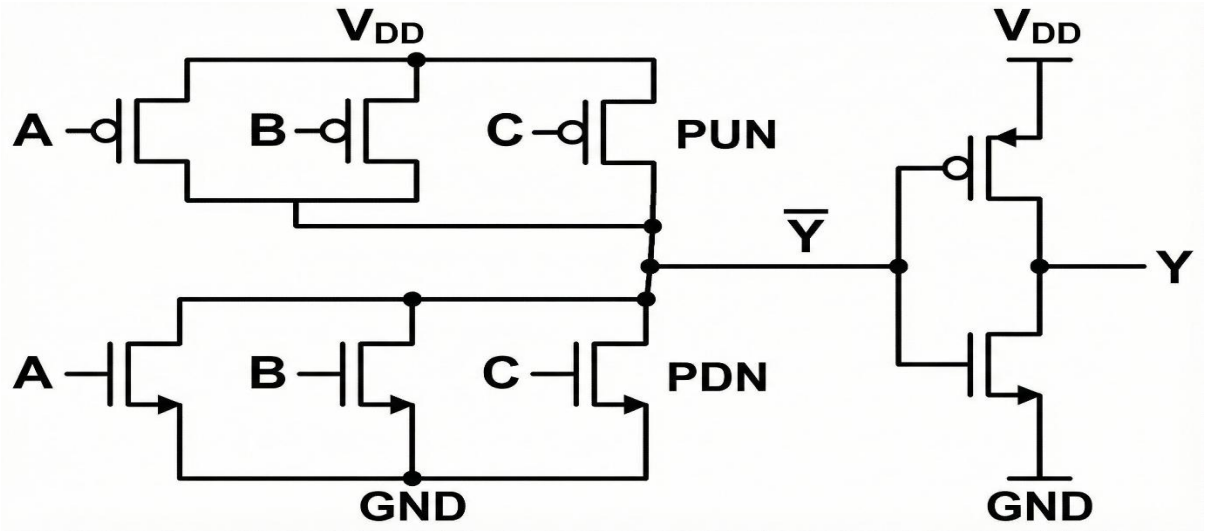

Stick Diagram:

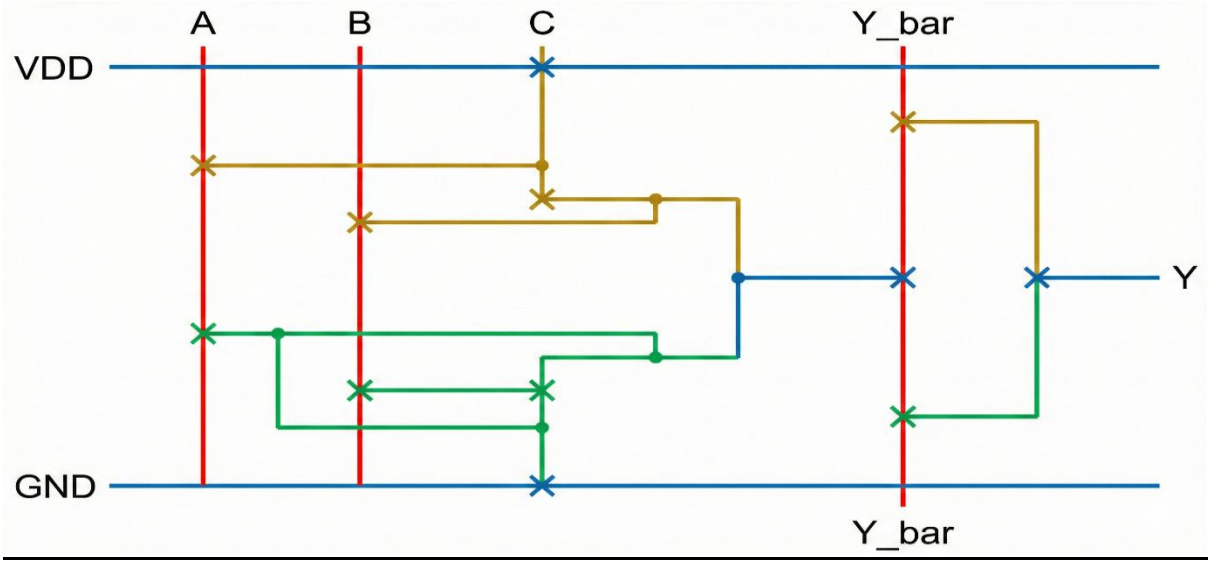

Layout:

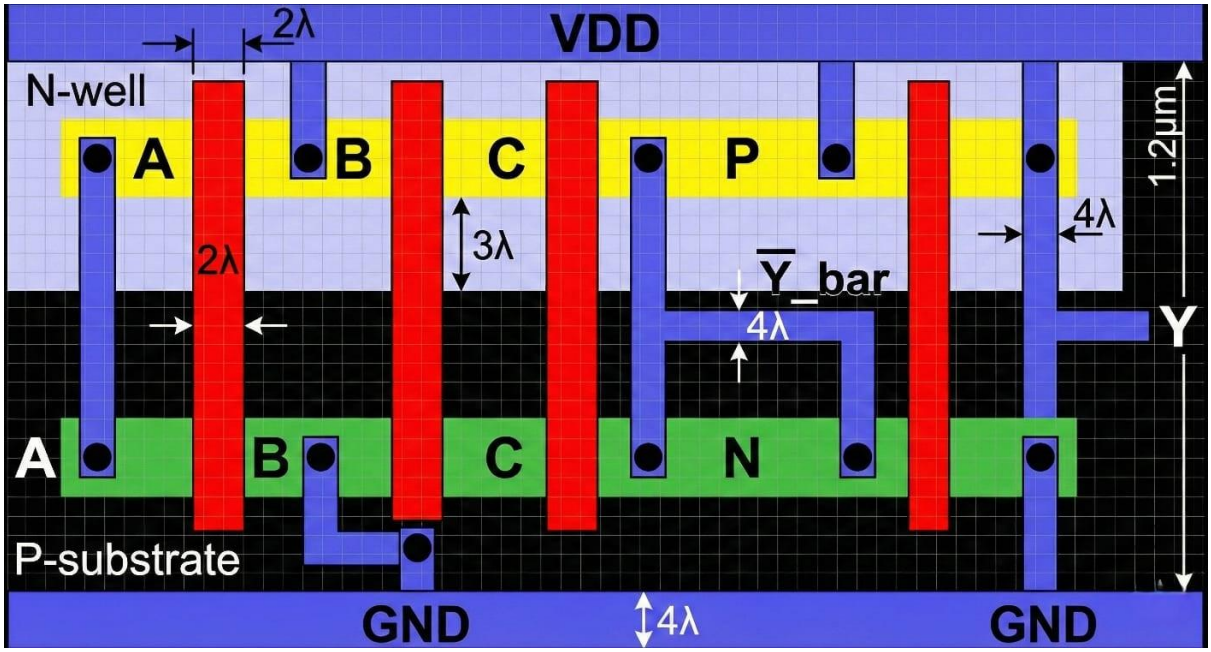

4.Draw the stick diagram of CMOS Inverter

A) CMOS (Complementary Metal Oxide Semiconductor) technology uses a combination of PMOS and NMOS transistors to implement digital logic circuits with low power dissipation and high noise immunity.

The stick diagram of a CMOS inverter shows the basic layout arrangement of PMOS and NMOS transistors using symbolic layers for diffusion, polysilicon, and metal interconnections.

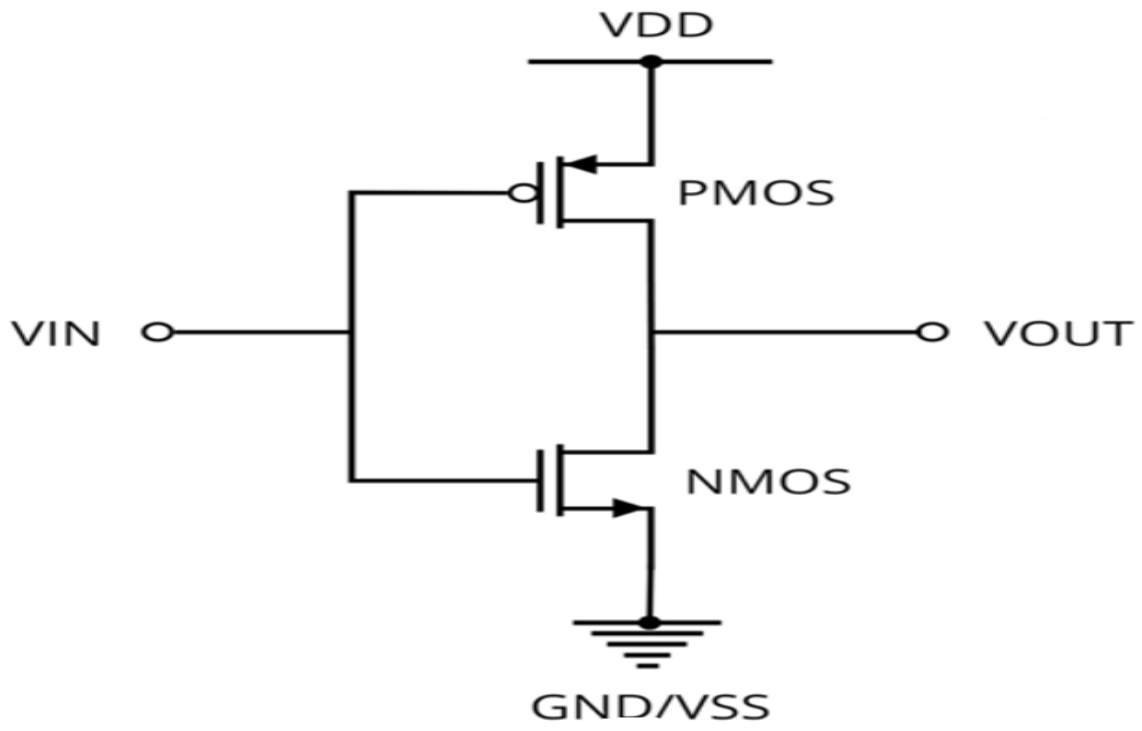
VDD
PMOS
VIN
VOUT
NMOS
GND/VSS

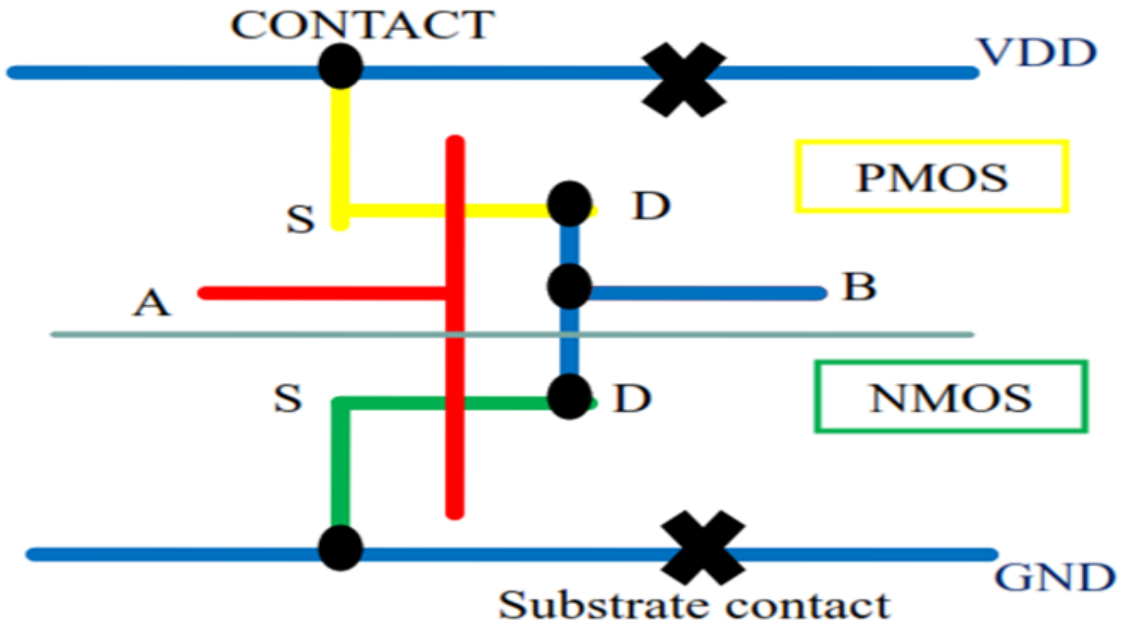
CONTACT
VDD
PMOS
S
D
A
B
S
D
NMOS
GND
Substrate contact

CMOS Inverter Layout:

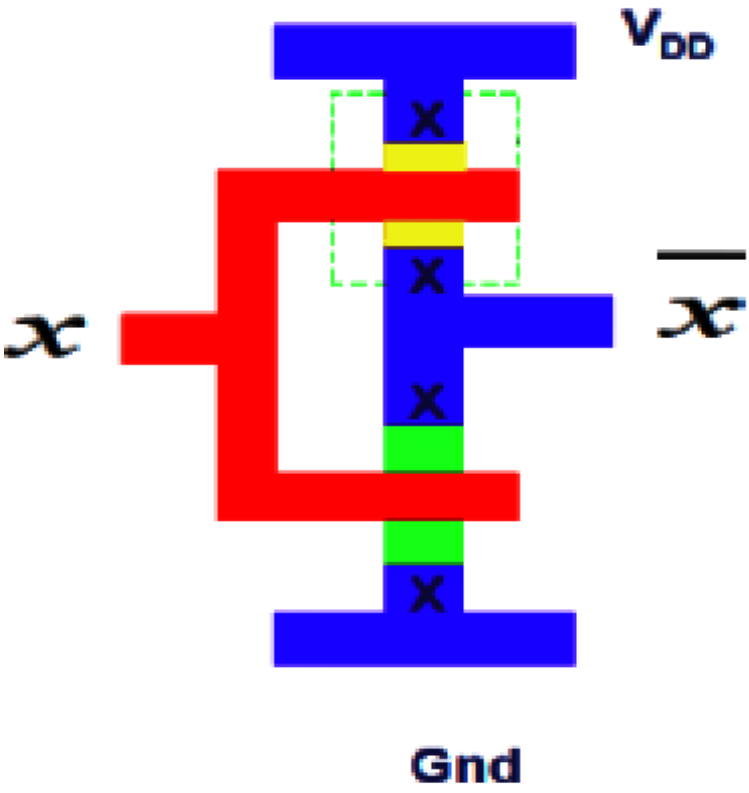

5) Describe the NMOS encoding for stick & layout diagrams

A) NMOS encoding in stick and layout diagrams represents how NMOS transistors are placed and connected in digital circuits**.**

Stick diagrams use simple lines and shapes to show relative positions and connections, while layout diagrams provide a detailed view of the physical arrangement of transistors, gates, contacts, and metal wires on a chip.

Both diagrams help designers visualize and optimize circuit design for functionality and manufacturing constraints.

Stick diagram

Encodings for a simple single metal nMOS process

COLOR	STICK ENCODING MONOCROME	LAYERS	MASK LAYOUT ENCODING MONOCROME	CIF LAYER Caltech Intermediate Form
GREEN		n-diffusion n^+active Thniox		ND
RED		Polysilicon		NP
BLUE		Metal 1		NM
BLACK		Contact cut		NC
GRAY	NOT APPLICABLE	Overglass		NG
nMOS ONLY YELLOW		Implant		NI
nMOS ONLY BROWN		Buried contact		NB

FEATURE	FEATURE (STICK)	FEATURE (SYMBOL)	FEATURE (MASK)
n-type enhancement mode transistor	D, L: W, G, S; L: W, S, D, G	L: W, S, D, G	(L: W = 1:1), S, D, G
Transistor length to width ratio L: W should be shown.			
n-type depletion mode transistor nMOS only	L: W; L: W	L: W, S, G, D	(L: W = 1:1)
Source, drain and gate labelling will not normally be shown.			

6) Draw the stick diagram 3 input NOR gate.

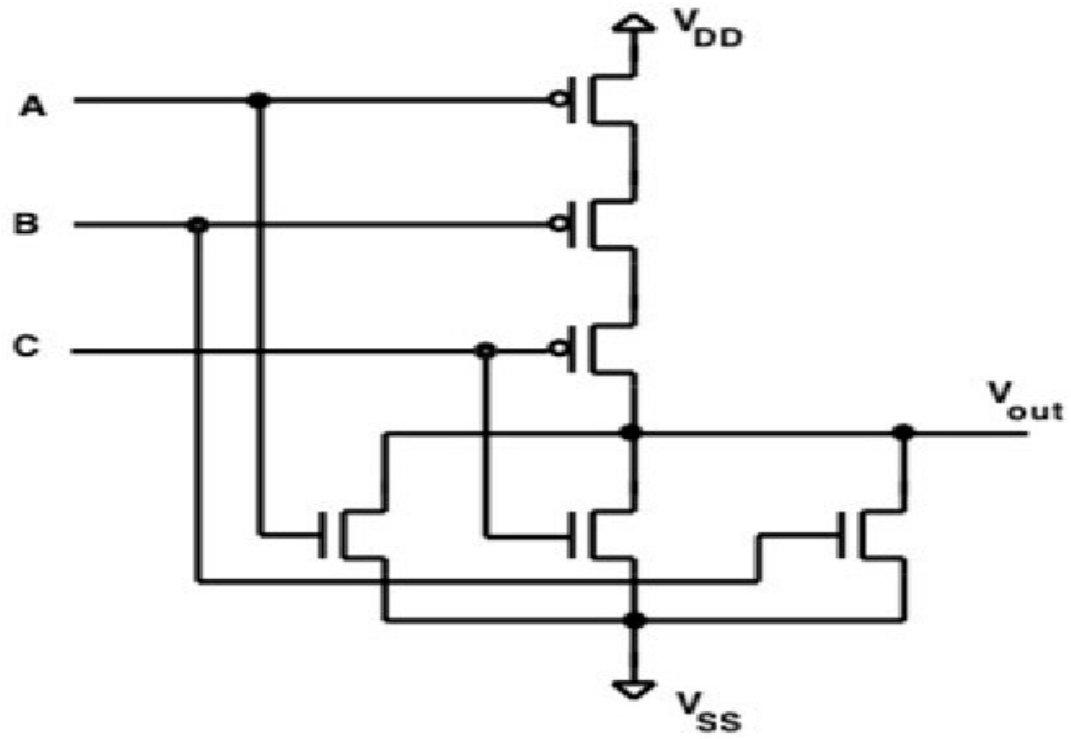

Circuit for CMOS 3-Input NOR Gate

Stick diagram of 3 input NOR gate

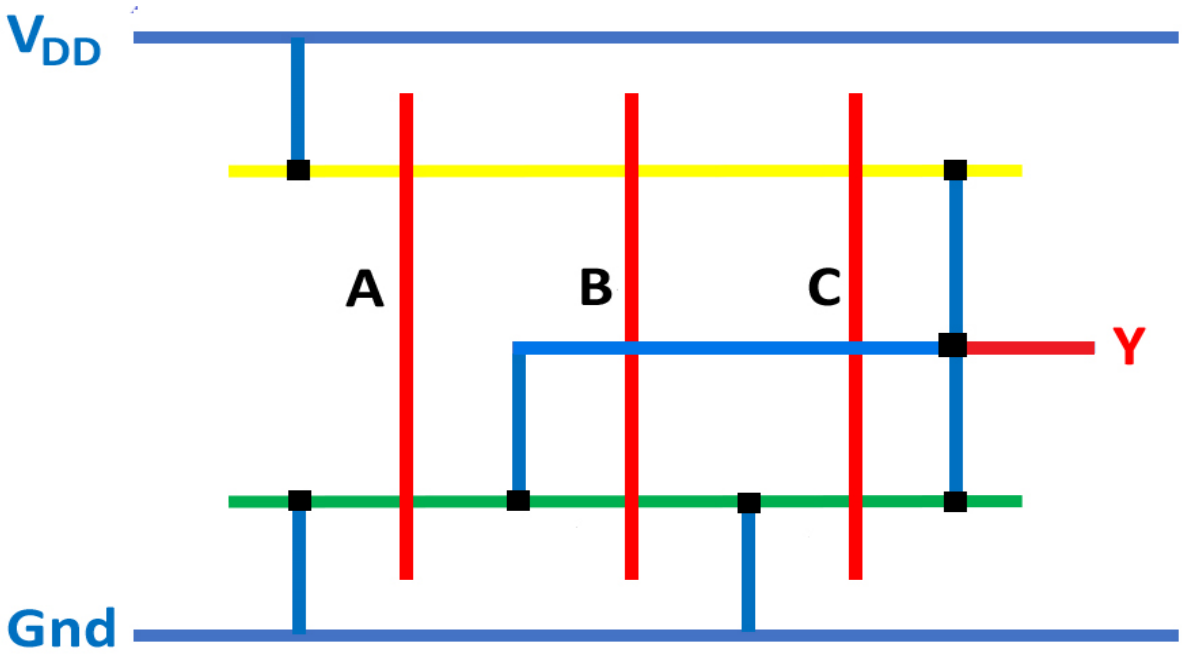

7) Explain λ based Design rules for Layout design

A) Lambda-based design rules guide the creation of electronic circuits, especially in scalable CMOS technology. These rules connect to a parameter called "λ," half the size of the smallest transistor part.

- Stick diagrams act like rough sketches of actual circuit layouts. They help bridge the gap between circuit design and how it will look physically.
- Circuit designers want compact, effective layouts for better performance and silicon space savings.
- Process engineers need rules for controllable, repeatable manufacturing.
- Measurements, like widths and spacing, are all based on λ, a simple concept related to transistor size.
- Rules offer a direct way to design layouts without complex math.
- Many experts accept these rules for their effectiveness.
- They allow flexible circuit design regardless of specific sizes. Following them ensures functioning circuits.
- Features must be at least 2λ, avoiding issues like short circuits.

Lambda-based design rules offer guidance for cost-effective, functional circuits. Built on λ, they lead to successful results when followed

MINIMUM WIDTH AND SPACING RULES

LAYER	TYPE OF RULE	VALUE
POLY	Minimum Width Minimum Spacing	2λ 2λ
N/P DIFFUSION	Minimum Width Minimum Spacing	3λ 3λ
N-WELL	Minimum Width Minimum Spacing	3λ 3λ
P-WELL	Minimum Width Minimum Spacing	3λ 3λ
METAL1	Minimum Width Minimum Spacing	3λ 3λ

MOSFET LAYOUT RULES

RULE	MEANING	VALUE
POLY Overlap	Minimum extension over ND/PD	2λ
POLY- ND/PD	Minimum Spacing	1λ
MOSFET Width	Minimum N+/P+ MOSFET W	3λ
ND/PD CONTACT	Exact Size Minimum Space to ND/PD Edge	2λ x 2λ 2λ
POLY CONTACT	Exact Size Minimum Space to POLY Edge	2λ x 2λ 2λ

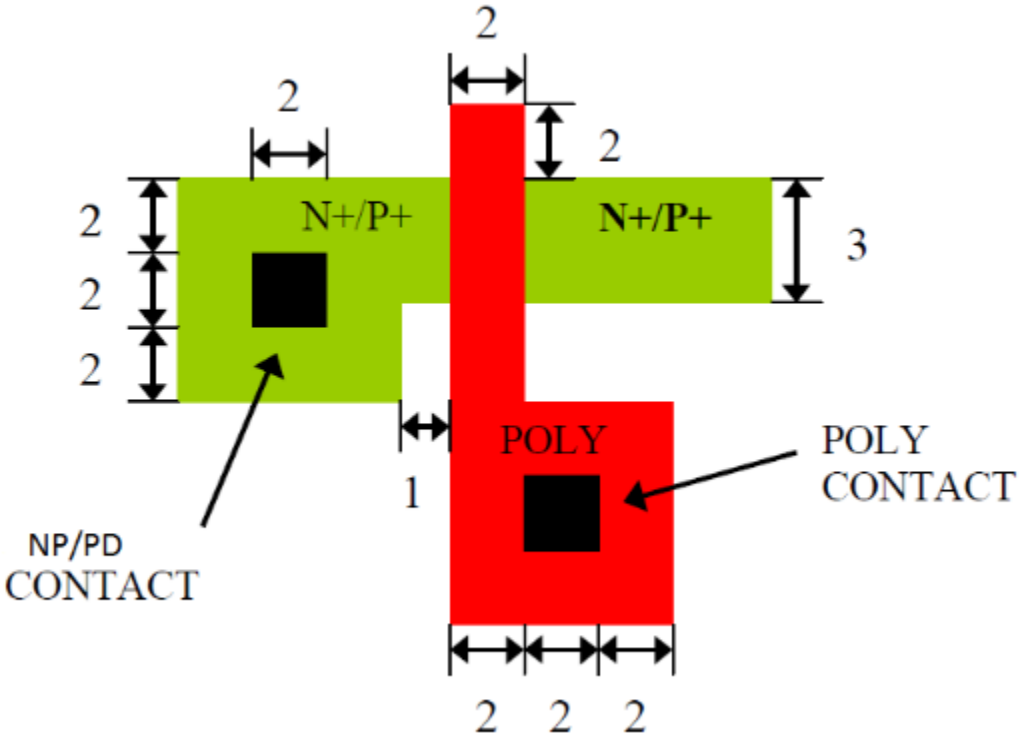

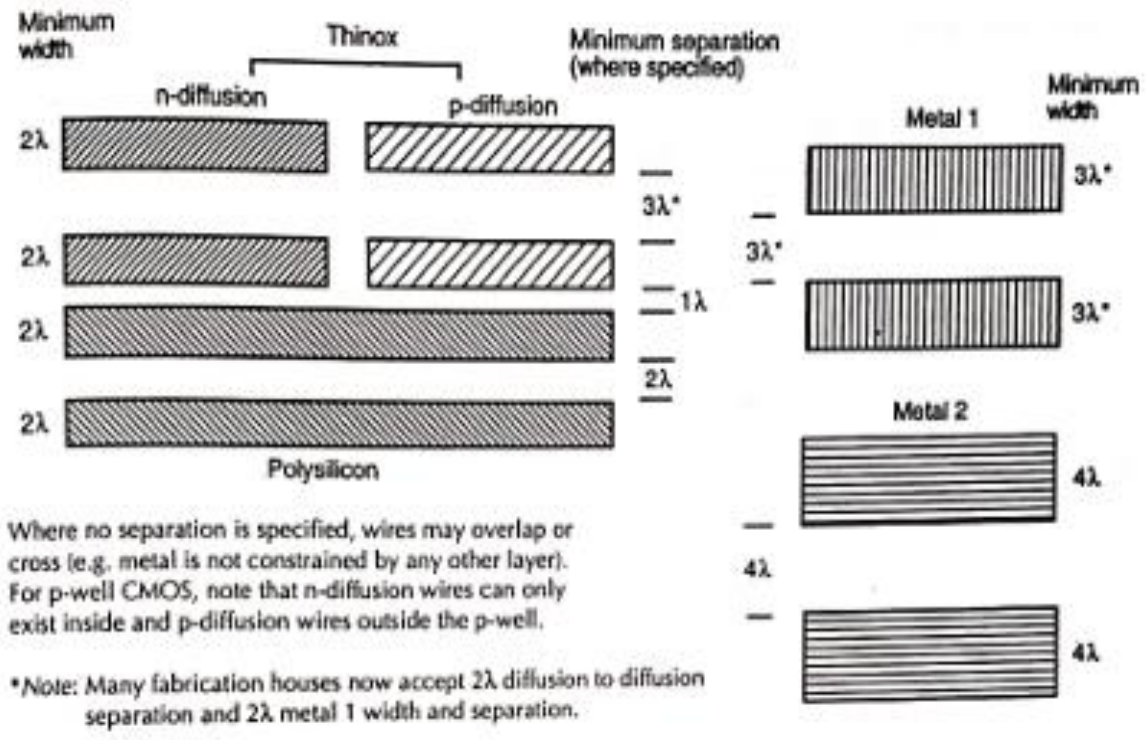

Figure 3–6 Design rules for wires (nMOS and CMOS)

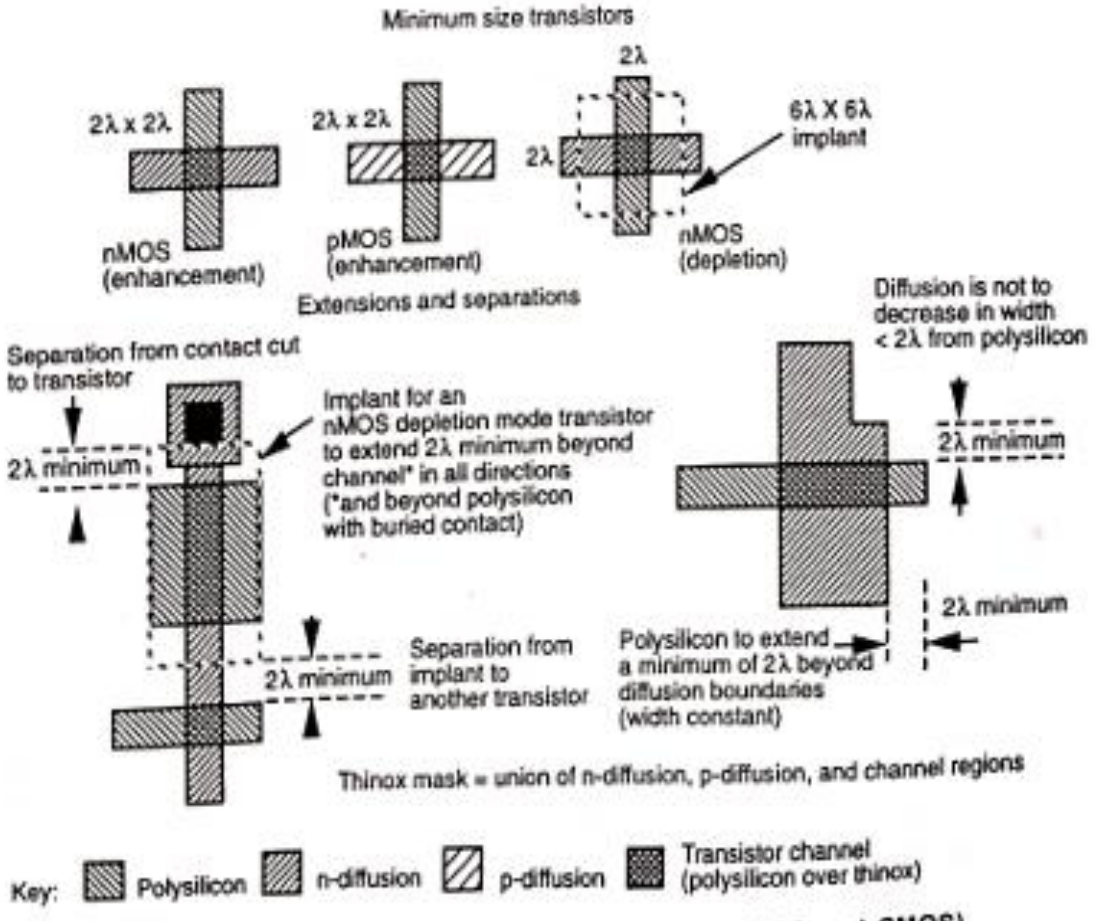

FIGURE 3.7 Transistor design rules (nMOS, pMOS and CMOS).

8) Draw the layout of diagram 3 input NAND gate

A)

- Inputs:Threeverticalpolysilicon gates (representing the three inputs)connect tohorizontalN diffusionandp-diffusionstrips.
- Gate:TheNANDgateis formed by these connections, controllingcurrentflowbetween sourceanddrainregions.
- Output: The output is taken fromthehorizontal N-diffusion orp- diffusionstrip.
- Rails:Metal1VDDrail isat the top, andMetal1GNDrail is at thebottomofthelayout.
- Dimensions: The layout is 32λ wideand40λtall,whereλisthe minimum feature size of the processtechnology.

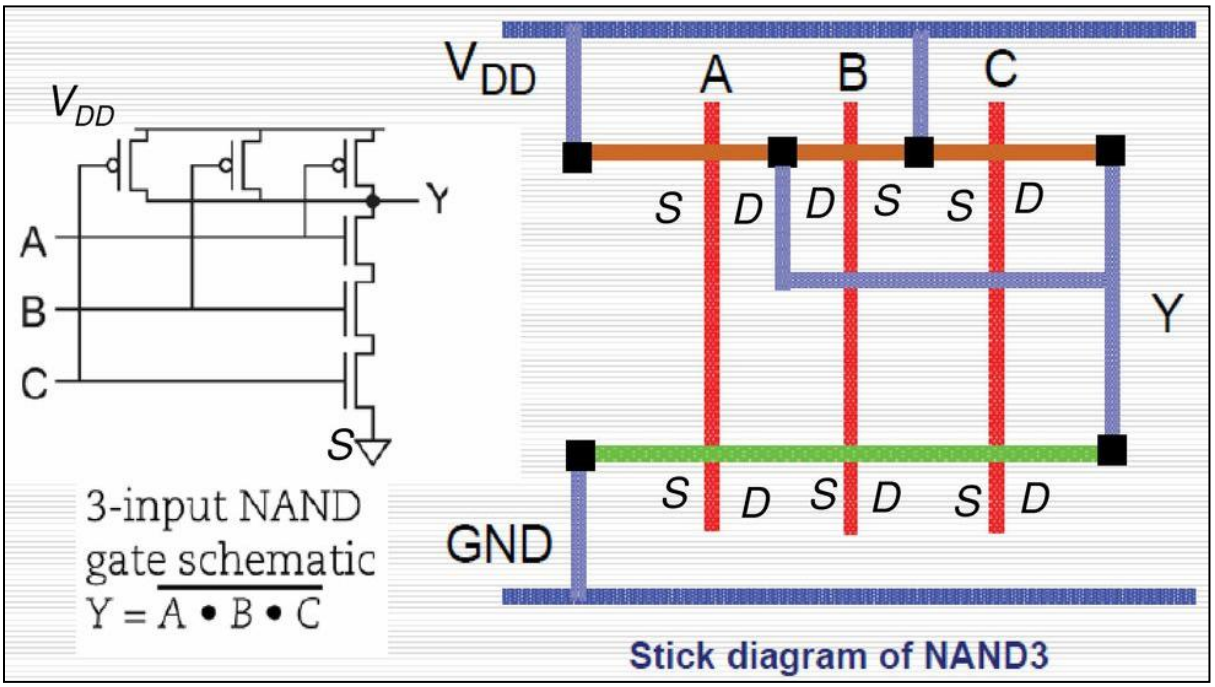

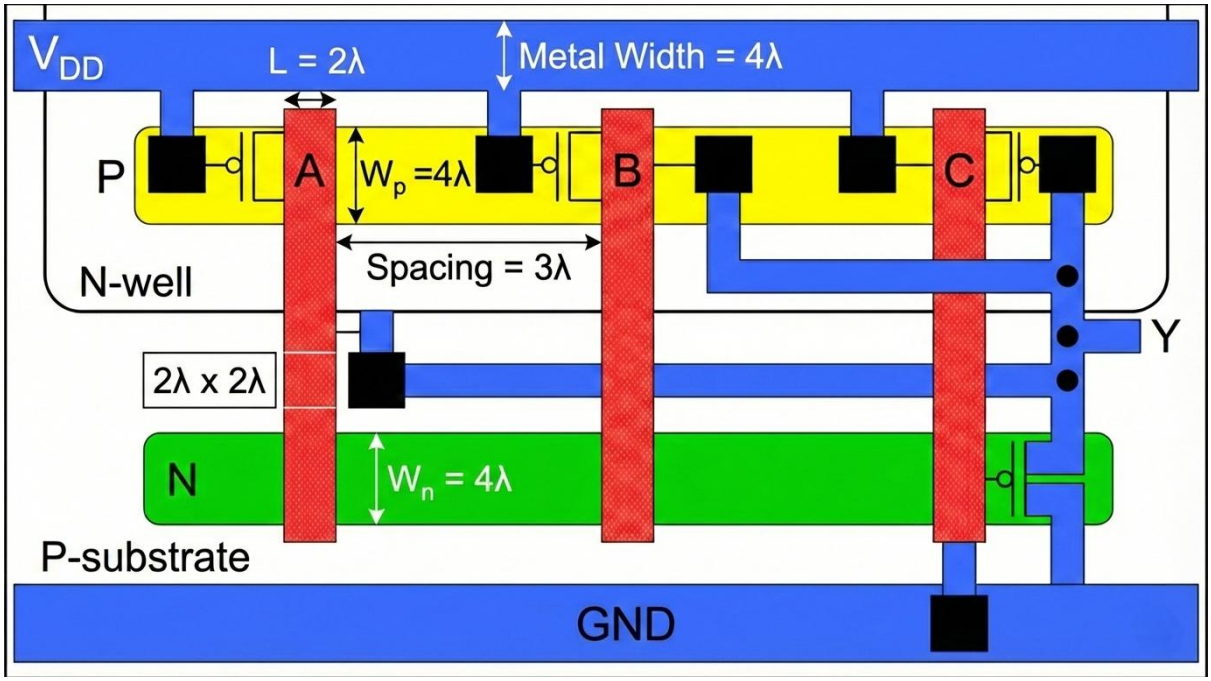

9) Describe the scaling Models?

ScalingModels

- Scaling models in semiconductor technology include constant electric field, constant voltage, and combined voltage and dimension scaling models.
- These models guide how dimensions and voltages are adjusted as technology advances.
- Scaling factors like gate length, oxide thickness, supply voltage, and interconnect dimensions will impact performance, power efficiency, and reliability.
- These models and factors drive the design of integrated circuits for optimal results in smaller technology nodes.
- The following figure indicates the device dimensions and substrate doping level which are associated with the scaling of a transistor.

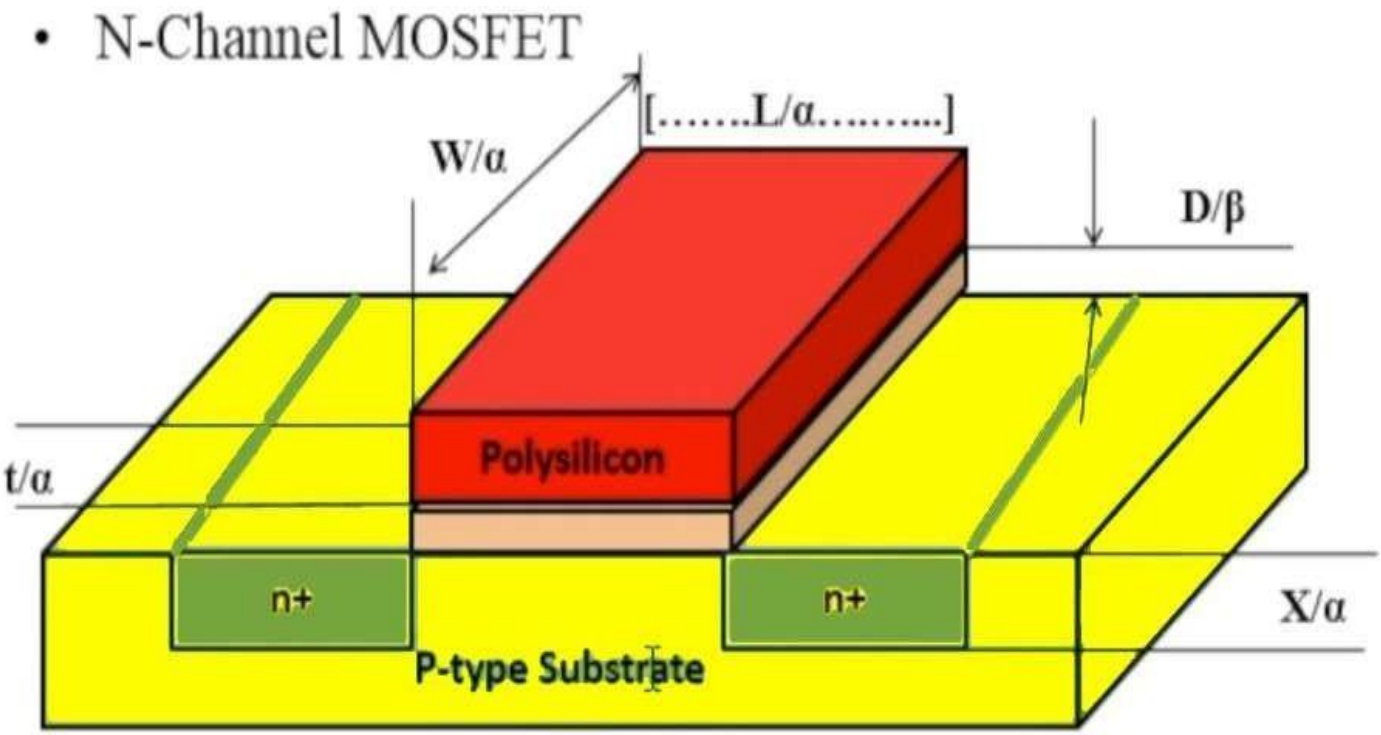

Here are the key points on how scaling is achieved in MOS circuits:

- Twoscaling factors are used- 1/α for most dimensions and 1/β for supply voltage and gate oxide thickness.
- For constant field scaling, β=α. This reduces all dimensions, including supply voltage, by 1/α.
- For constant voltage scaling, β=1. This keeps supply voltage constant while reducing other dimensions by 1/α.
- Lateral and vertical device dimensions are reduced by 1/α.
- Doping concentrations are increased by α to shrink depletion regions by

1/α.

- Device voltages are reduced by 1/α for constant field scaling.
- Typical scaling factor is 0.7 (30% reduction in dimensions per generation).
- Scaling allows packing more devices per chip and also results in faster switching speeds due to reduced dimensions.

Why 1/α and 1/β are used instead of α & β

In MOS circuits:

- α and β are gain factors related to drain current I_{ds}
- Using 1/α and 1/β instead simplifies circuit equations.
- g_m and r_o have more direct meaning than α and β
- 1/α=gm(transconductance)
- 1/β=r_o(output resistance)
- α and β depend on physical properties of the MOS transistor
- Values come from device parameters or manufacturer specs

Scaling Parameters

Summary

Parameters		*Combined V and D*	*Constant E*	*Constant V*
V_{DD}	Supply voltage	$1/\beta$	$1/\alpha$	1
L	Channel length	$1/\alpha$	$1/\alpha$	$1/\alpha$
W	Channel width	$1/\alpha$	$1/\alpha$	$1/\alpha$
D	Gate oxide thickness	$1/\beta$	$1/\alpha$	1
A_g	Gate area	$1/\alpha^2$	$1/\alpha^2$	$1/\alpha^2$
C_0(or C_{ox})	Gate C per unit area	β	α	1
C_g	Gate capacitance	β/α^2	$1/\alpha$	$1/\alpha^2$
C_x	Parasitic capacitance	$1/\alpha$	$1/\alpha$	$1/\alpha$
Q_{on}	Carrier density	1	1	1
R_{on}	Channel resistance	1	1	1
I_{dss}	Saturation current	$1/\beta$	$1/\alpha$	1
A_c	Conductor X-section area	$1/\alpha^2$	$1/\alpha^2$	$1/\alpha^2$
I	Current density	α^2/β	α	α^2
V_g	Logic 1 level	$1/\beta$	$1/\alpha$	1
E_g	Switching energy	$1/\alpha^2.\beta$	$1/\alpha^3$	$1/\alpha^2$
P_g	Power dispn per gate	$1/\beta^2$	$1/\alpha^2$	1
N	Gates per unit area	α^2	α^2	α^2
P_a	Power dispn per unit area	α^2/β^2	1	α^2
T_d	Gate delay	β/α^2	$1/\alpha$	$1/\alpha^2$
f_0	Max. operating frequency	α^2/β	α	α^2
P_T	Power-speed product	$1/\alpha^2.\beta$	$1/\alpha^3$	$1/\alpha^2$

10)Briefly discuss scaling of MOS circuits and its limitation?

A)

Scaling of MOS circuits

a. MOS circuits use MOSFETs as building blocks. Scaling them means shrinking component dimensions as technology advances, a key part of Moore's Law. This boosts computing power and efficiency by fitting more transistors in less space. Smaller MOSFETs mean faster speeds, lower power use, but also challenges.

Benefits:

1. Scaling reduces transistor size, increasing density and performance.
2. Smaller transistors switch faster while using less power.

Challenges

Challenges:

1. More transistors in a small space leads to heat dissipation

2. Tiny transistors have higher leakage current, raising standby power.
3. Manufacturing variation impacts threshold voltages and performance.
4. Shrinking transistors amplifies unwanted short-channel effects.

Scaling Complexity:

1. Shrinking needs very complex new manufacturing methods.
2. Designing layouts for tiny components is very difficult.

Limitations of Scaling in MOS Circuits:

Here are some key limitations of scaling in MOS circuits:

1. **Short Channel Effects-** As MOS transistors are scaled to smaller dimensions, short channel effects like drain-induced barrier lowering become more prominent. This degrades subthreshold slope and increases leakage current.
2. **Increased Power Density-** Smaller MOSFETs allow packing more transistors in the same area. But power density increases rapidly, leading to heating issues.
3. **Gate Oxide Tunnelling-** Thinner gate oxides are needed for scaling, increasing gate tunnelling current and standby power dissipation.
4. **Mobility Degradation-** Higher doping and electric fields in scaled devices reduce carrier mobility, degrading drive current and transconductance.
5. **Increased Process Variation-** Variations in dopant concentrations, geometries and interfaces are exaggerated at smaller scales, requiring larger design margins.
6. **Interconnect Scaling Limits-** Interconnects don't scale as well as transistors, leading to resistance and parasitic effects becoming more significant.
7. **Cost Increases-** Fabrication costs rise sharply for advanced nodes due to process complexity. The cost per transistor stops decreasing.
8. **Quantum Effects-** At very small geometries near the limits of scaling, quantum mechanical effects start to dominate device behaviour.

In summary, the key challenges are short channel effects, power density, gate oxide leakage, mobility degradation, process variation, interconnect bottlenecks, cost escalation, and quantum effects. Overcoming these requires significant innovation in materials, device designs, and manufacturing processe